7 COROLLA VERSO

(Cont. next page)

Power Source

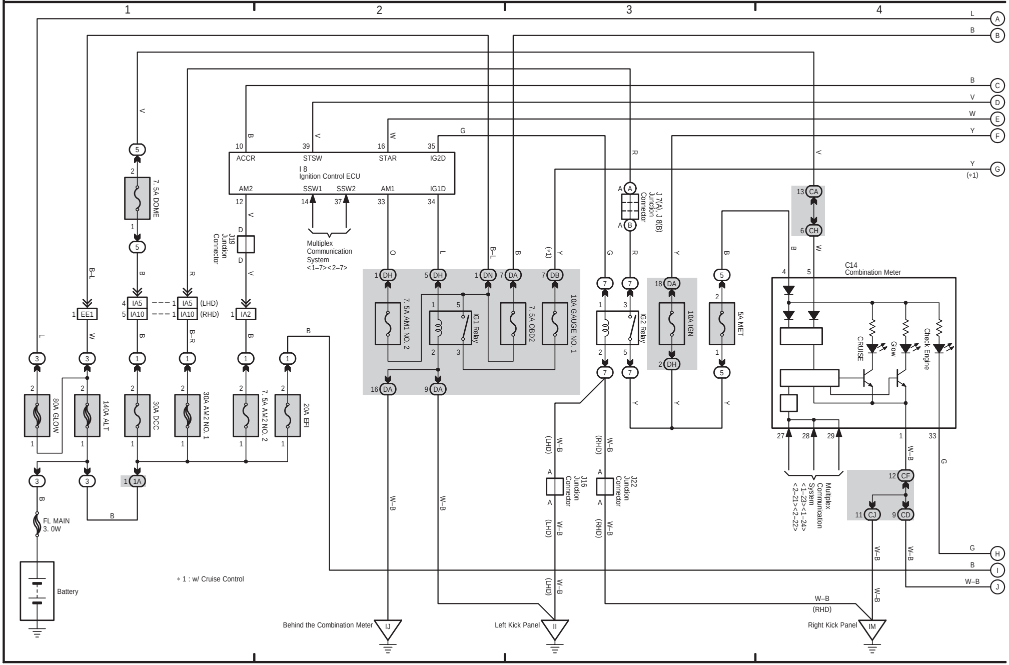
1
2
3
4
A
B
C
D
E
F
G
H
I
J
L
B
V
W
Y
G
R
(∗1)
ACCR
STSW
STAR
IG2D
AM2
SSW1
SSW2
AM1
IG1D
I 8
Ignition Control ECU
J19
Junction
Connector
Multiplex
Communication
System
<1–7><2–7>
7. 5A DOME
EE1
IA5
IA10
IA2
(LHD)
(RHD)
80A GLOW
140A ALT
30A DCC
30A AM2 NO. 1
7. 5A AM2 NO. 2
20A EFI
1A
FL MAIN
3. 0W
Battery
DH
DN
DA
DB
7. 5A AM1 NO. 2
IG1 Relay
7. 5A OBD2
10A GAUGE NO. 1
J 7(A), J 8(B)
Junction
Connector
IG2 Relay
10A IGN
5A MET
CA
CH
C14
Combination Meter
CRUISE
Glow
Check Engine
Multiplex
Communication
System
<1–23><1–24>
<2–21><2–22>
CF
CJ
CD
J16
Junction
Connector
J22
Junction
Connector
W–B
B–L
B–R
O
Behind the Combination Meter
IJ
Left Kick Panel
II
Right Kick Panel
IM

∗ 1 : w/ Cruise Control

(Cont. next page)

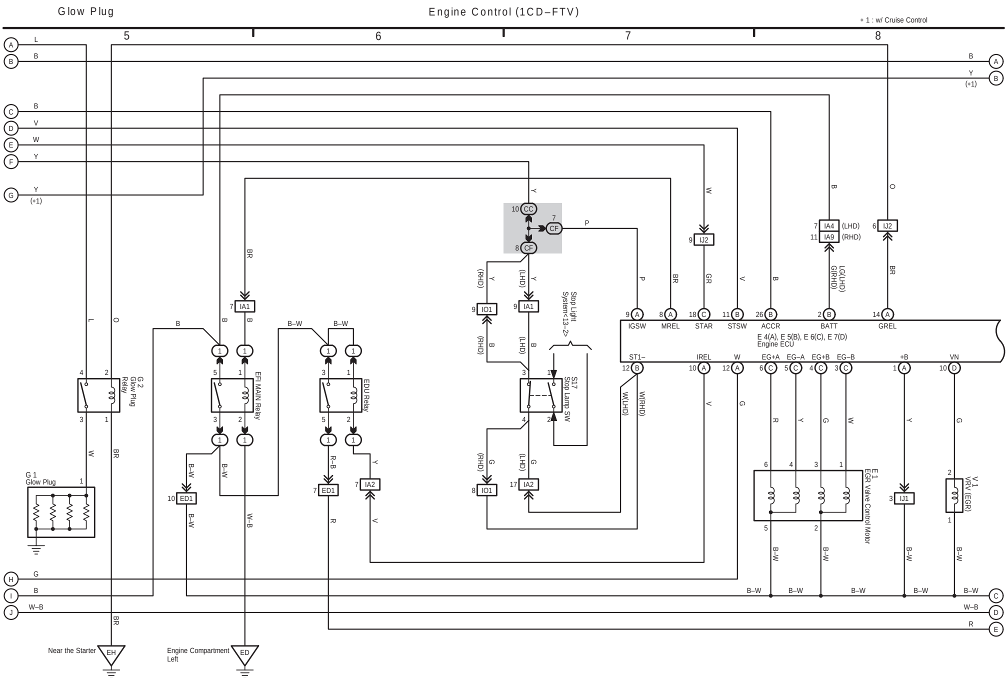
Glow Plug
Engine Control (1CD–FTV)
＊1 : w/ Cruise Control
5
6
7
8
G 2 Glow Plug Relay
G 1 Glow Plug
EFI MAIN Relay
EDU Relay
S17 Stop Lamp SW
Stop Light System<13–2>
E 4(A), E 5(B), E 6(C), E 7(D) Engine ECU
IGSW
MREL
STAR
STSW
ACCR
BATT
GREL
ST1–
IREL
W
EG+A
EG–A
EG+B
EG–B
+B
VN
E 1 EGR Valve Control Motor
V 1 VRV (EGR)
(LHD)
(RHD)
Near the Starter
EH
Engine Compartment Left
ED
IA1
IA2
IA4
IA9
IJ1
IJ2
IO1
ED1
CC
CF

(Cont. next page)

Engine Control (1CD–FTV)

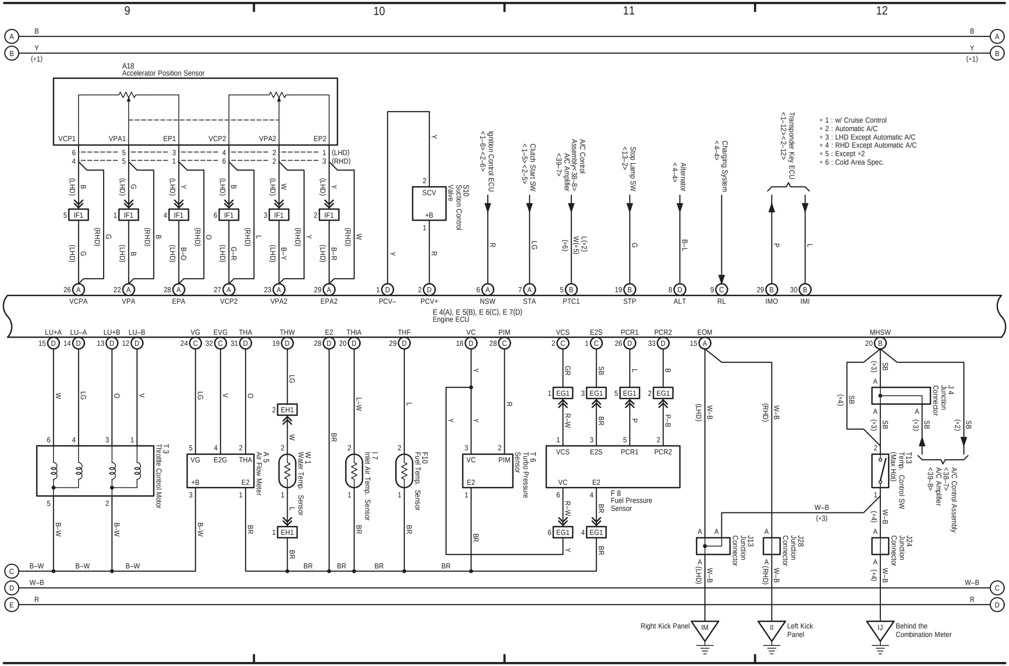
9
10
11
12
A18
Accelerator Position Sensor
VCP1
VPA1
EP1
VCP2
VPA2
EP2
(LHD)
(RHD)
IF1
S10
Suction Control Valve
SCV
+B
Ignition Control ECU <1–6><2–6>
Clutch Start SW <1–5><2–5>
A/C Control Assembly<38–8> A/C Amplifier <39–7>
Stop Lamp SW <13–2>
Alternator <4–4>
Charging System <4–4>
Transponder Key ECU <1–12><2–12>
VCPA
VPA
EPA
VCP2
VPA2
EPA2
PCV–
PCV+
NSW
STA
PTC1
STP
ALT
RL
IMO
IMI
E 4(A), E 5(B), E 6(C), E 7(D)
Engine ECU
LU+A
LU–A
LU+B
LU–B
VG
EVG
THA
THW
E2
THIA
THF
VC
PIM
VCS
E2S
PCR1
PCR2
EOM
MHSW
T3
Throttle Control Motor
A 5
Air Flow Meter
VG
E2G
THA
+B
E2
EH1
W 1
Water Temp. Sensor
I 7
Inlet Air Temp. Sensor
F10
Fuel Temp. Sensor
T 6
Turbo Pressure Sensor
VC
PIM
E2
EG1
F 8
Fuel Pressure Sensor
J 4
Junction Connector
T13
Temp. Control SW (Max Hot)
A/C Control Assembly <38–7> A/C Amplifier <39–8>
J13
Junction Connector
J28
Junction Connector
J24
Junction Connector
Right Kick Panel
IM
II
Left Kick Panel
IJ
Behind the Combination Meter
B
Y
(*1)
W–B
R
B–W
BR

∗ 1 : w/ Cruise Control
∗ 2 : Automatic A/C
∗ 3 : LHD Except Automatic A/C
∗ 4 : RHD Except Automatic A/C
∗ 5 : Except ∗2
∗ 6 : Cold Area Spec.

Engine Control (1CD–FTV)

∗ 1 : w/ Cruise Control
∗ 7 : Shielded

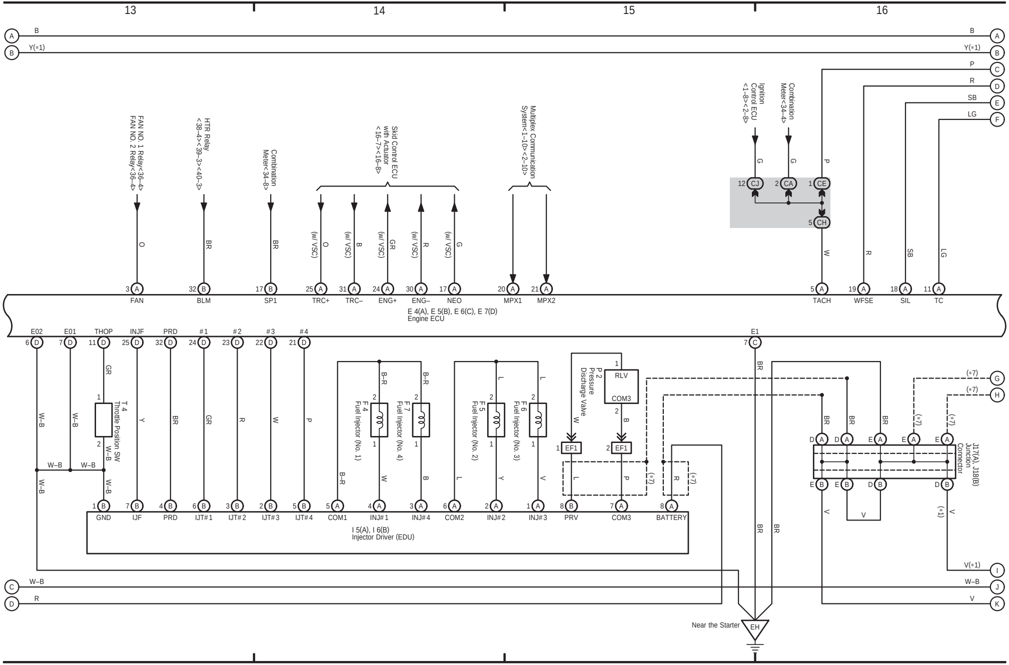
13
14
15
16
A B
B Y(∗1)
C P
D R
E SB
F LG
FAN NO. 1 Relay<36–4>
FAN NO. 2 Relay<36–4>
HTR Relay <38–4><39–3><40–3>
Combination Meter<34–8>
Skid Control ECU with Actuator <16–7><16–8>
Multiplex Communication System<1–10><2–10>
Igniton Control ECU <1–8><2–8>
Combination Meter<34–4>
O
BR
BR
(w/ VSC) O
(w/ VSC) B
(w/ VSC) GR
(w/ VSC) R
(w/ VSC) G
G
G
P
12 CJ
2 CA
1 CE
5 CH
W
R
SB
LG
3 A FAN
32 B BLM
17 B SP1
25 A TRC+
31 A TRC–
24 A ENG+
30 A ENG–
17 A NEO
20 A MPX1
21 A MPX2
5 A TACH
19 A WFSE
18 A SIL
11 A TC
E 4(A), E 5(B), E 6(C), E 7(D)
Engine ECU
E02 6 D
E01 7 D
THOP 11 D
INJF 25 D
PRD 32 D
#1 24 D
#2 23 D
#3 22 D
#4 21 D
E1 7 C
W–B
W–B
GR
1
T 4 Throttle Position SW
2
W–B
Y
BR
GR
R
W
P
W–B
W–B
W–B
W–B
B–R
B–R
2
F 4 Fuel Injector (No. 1)
1
W
2
F 7 Fuel Injector (No. 4)
1
B
B–R
L
L
2
F 5 Fuel Injector (No. 2)
1
Y
2
F 6 Fuel Injector (No. 3)
1
V
L
P 2 Pressure Discharge Valve
W
1
RLV
COM3
2
B
1 EF1
2 EF1
L
P
(∗7)
R
(∗7)
BR
BR
BR
(∗7)
G
(∗7)
H
BR
BR
BR
(∗7)
(∗7)
D A
D A
E A
E A
E A
J17(A), J18(B) Junction Connector
E B
E B
D B
D B
V
V
(∗1)
V
1 B GND
7 B IJF
4 B PRD
6 B IJT#1
3 B IJT#2
2 B IJT#3
5 B IJT#4
5 A COM1
4 A INJ#1
3 A INJ#4
6 A COM2
2 A INJ#2
1 A INJ#3
8 B PRV
7 A COM3
8 A BATTERY
I 5(A), I 6(B)
Injector Driver (EDU)
BR
BR
I V(∗1)
C W–B
J W–B
D R
K V
Near the Starter
EH

7 COROLLA VERSO (Cont' d)

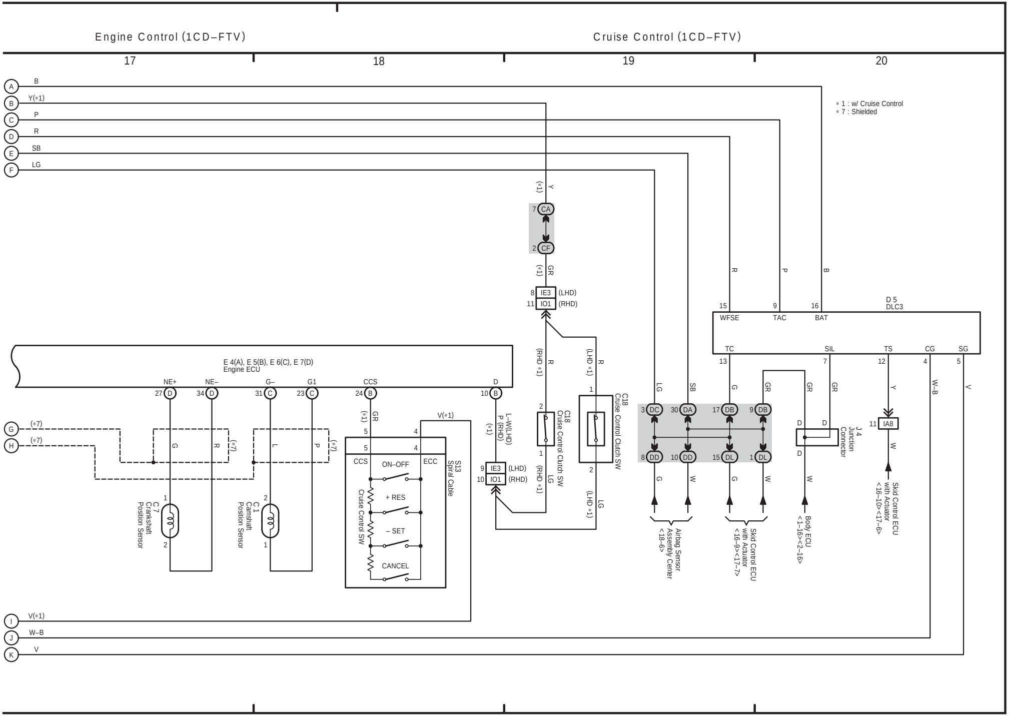
Engine Control (1CD–FTV)
Cruise Control (1CD–FTV)
17
18
19
20
∗ 1 : w/ Cruise Control
∗ 7 : Shielded
A B
B Y(∗1)
C P
D R
E SB
F LG
G (∗7)
H (∗7)
I V(∗1)
J W–B
K V
E 4(A), E 5(B), E 6(C), E 7(D)
Engine ECU
NE+ 27 D
NE– 34 D
G– 31 C
G1 23 C
CCS 24 B
D 10 B
C 7 Crankshaft Position Sensor
C 1 Camshaft Position Sensor
S13 Spiral Cable
Cruise Control SW
CCS
ON–OFF
+ RES
– SET
CANCEL
ECC
V(∗1)
GR (∗1)
L–W(LHD) P (RHD) (∗1)
7 CA
2 CF
Y (∗1)
GR (∗1)
8 IE3 (LHD)
11 IO1 (RHD)
9 IE3 (LHD)
10 IO1 (RHD)
R (RHD ∗1)
R (LHD ∗1)
LG (RHD ∗1)
LG (LHD ∗1)
C18 Cruise Control Clutch SW
C18 Cruise Control Clutch SW
3 DC
30 DA
17 DB
9 DB
8 DD
10 DD
15 DL
1 DL
D 5 DLC3
15 WFSE
9 TAC
16 BAT
13 TC
7 SIL
12 TS
4 CG
5 SG
J 4 Junction Connector
11 IA8
Airbag Sensor Assembly Center <18–6>
Skid Control ECU with Actuator <16–9><17–7>
Body ECU <1–16><2–16>
Skid Control ECU with Actuator <16–10><17–6>